Eco - Basin Taps

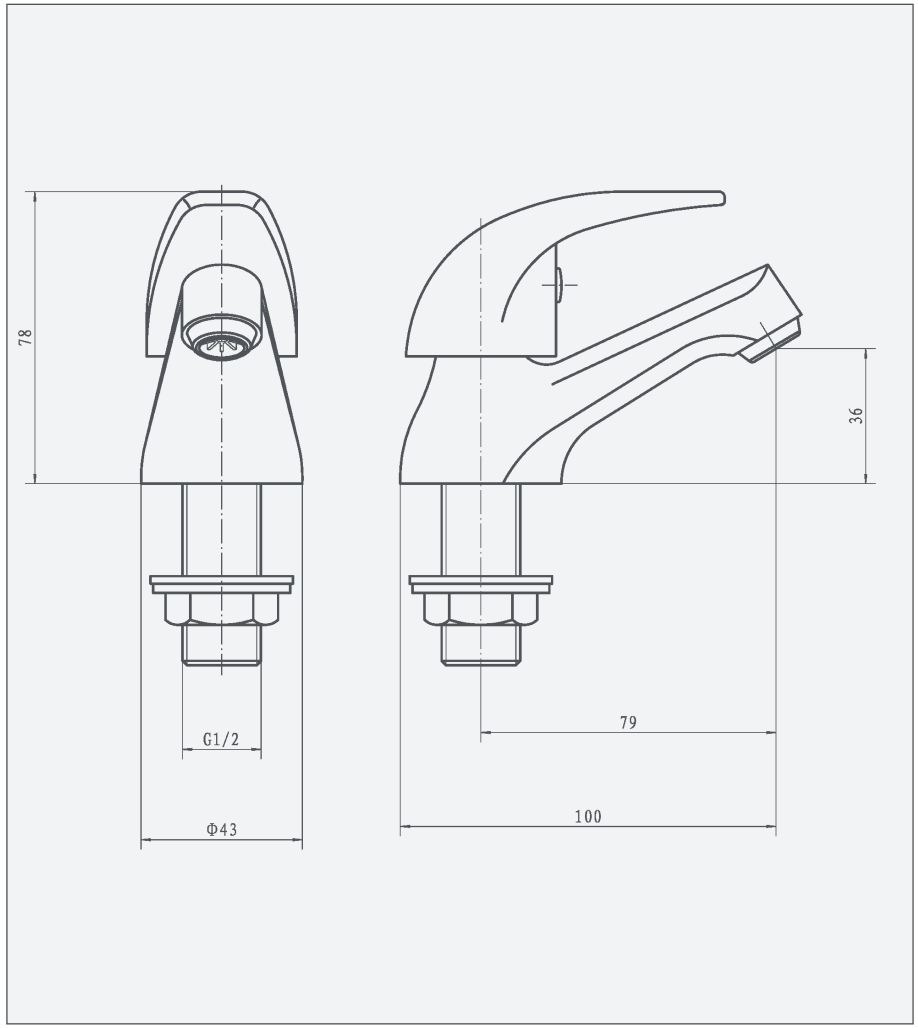

Eco Basin Taps

Code: E-BNT

Features

- ncludes Neoperl flow straightener to ensure smooth flow
- Discreet etching for hot and cold
- 10 year warranty (2 year on cartridge)

Technical Details

- 2 tap hole basin taps - chrome
- 1/2" BSP inlets

Operating Pressure	0.2 bar	0.5 bar	1 bar	2 bar
Flow Rate (L/min)	**5.6**	**9.9**	**14.7**	**21.5**

Unit 5, Kiltonga Industrial Estate,
Newtownards, Co Down,
Northern Ireland. BT23 4TJ

Tel: +44 (0) 28 9182 8000
Fax: +44 (0) 28 9181 2888

Sales Enquiries
Email: info@aquallabrassware.com

Technical and Aftersales
Email: support@aquallabrassware.com

www.aquallabrassware.com

© 2015 Aqualla. All rights reserved.