Georgia Traditional - Towel Warmer

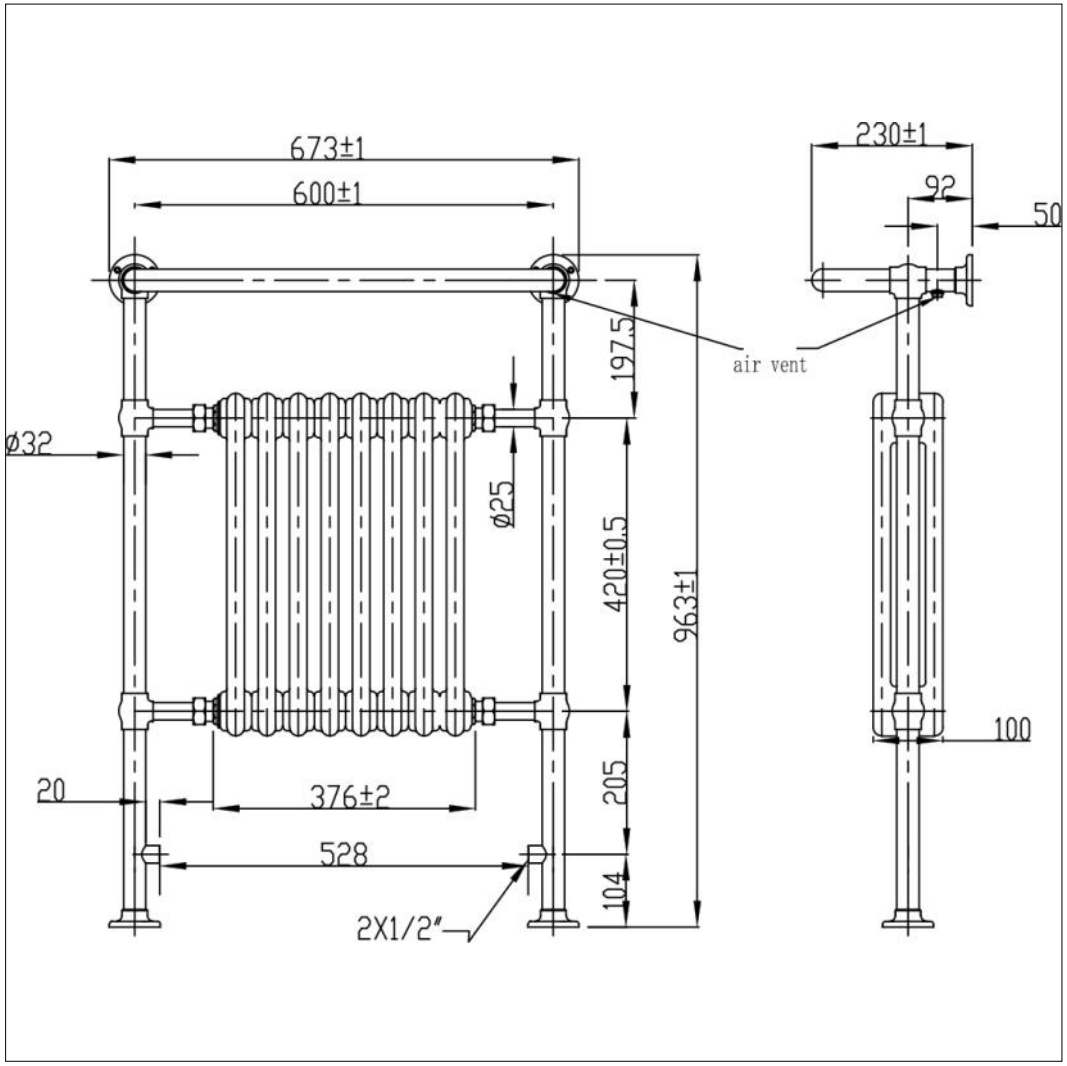

Georgia Traditional - Towel Warmer

Code: TR9-6

H/Height (mm)	W/Width (mm)	D/Pipe Centres (mm)*	BTU (50C)	BTU (60C)
952	659	435**	2166	2599

*Distance from wall to pipe centres - 96mm (+/- 2mm variance on all pipe centres).

**If used with Aqualla Traditional angled valves.

All BTU ratings at 50℃ are for the EN442 regulation test and the BTU ratings at 60℃ are for comparison.

Units 3 & 4, 16 Crawfordsburn Road,
Newtownards, Co Down,
Northern Ireland. BT23 4EA

Tel: +44 (0) 28 9182 8000
Fax: +44 (0) 28 9181 2888

Sales Enquiries
Email: info@aquallabrassware.com

Technical and Aftersales
Email: support@aquallabrassware.com

aquallabrassware.com

© 2019 Aqualla. All rights reserved.