Glow LED Mirror - 1000 x 600mm

AQUALLA

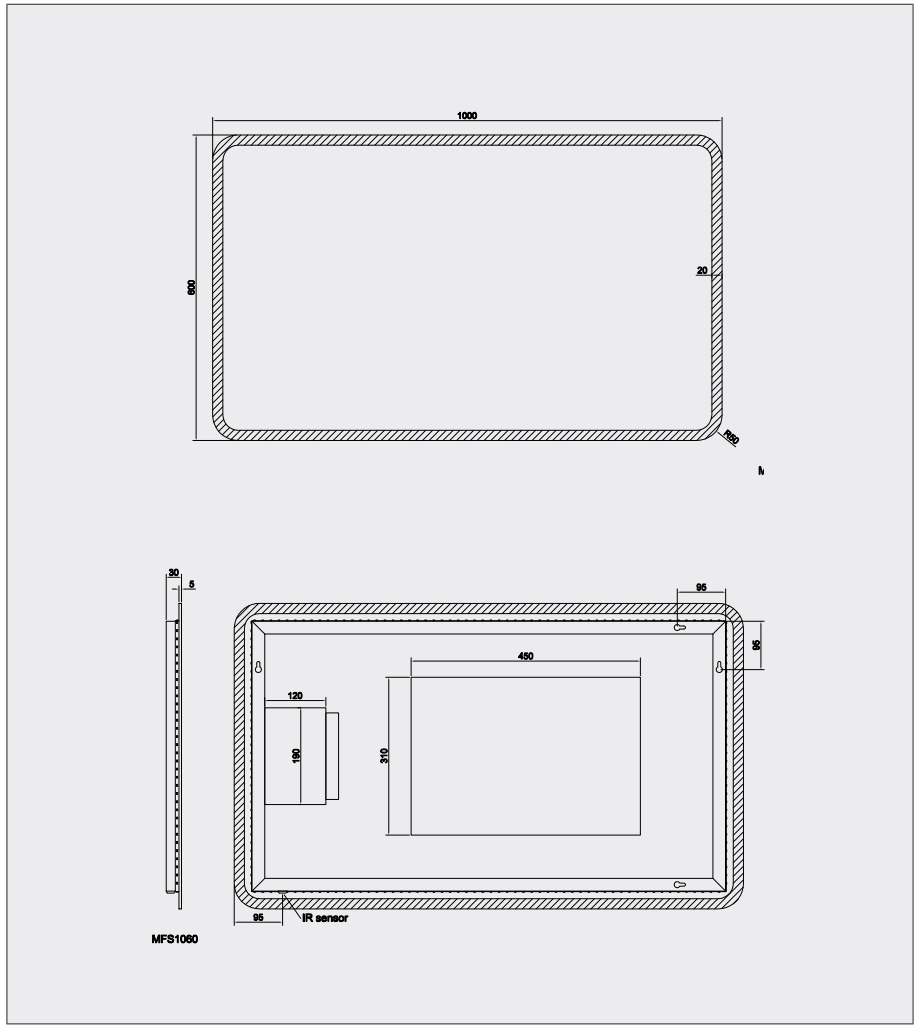

Glow LED Mirror - 1000 x 600mm
Code: 10G106

Features
- Energy efficient LED lighting
- Heated demister pad
- Infrared on/off sensor

Portrait or Landscape Fitting

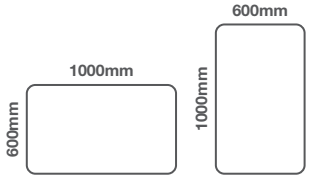

10G106

Units 3 & 4
16 Crawfordsburn Road
Newtownards
County Down BT23 4EA

Tel: +44 (0) 28 9182 8000
Fax: +44 (0) 28 9181 2888

Sales Enquiries
Email: info@aquallabrassware.com

Technical and Aftersales Support
Email: support@aquallabrassware.com

www.aquallabrassware.com

© 2018 Aqualla. All rights reserved.